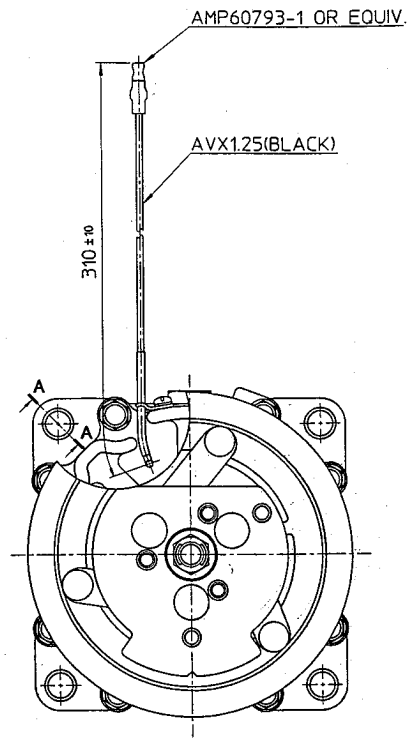


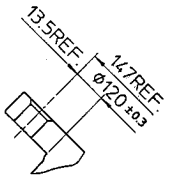


PARTIAL SECT. A–A

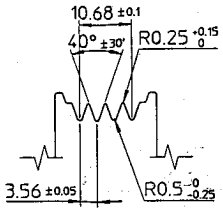


DETAIL OF ROTOR GROOVE(2:1)

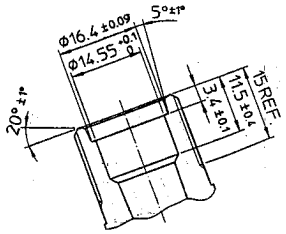


PARTIAL SECT.B–B(2:1)

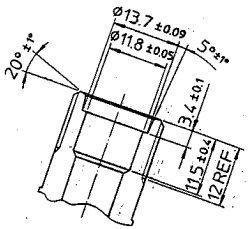


PARTIAL SECT.C–C(2:1)

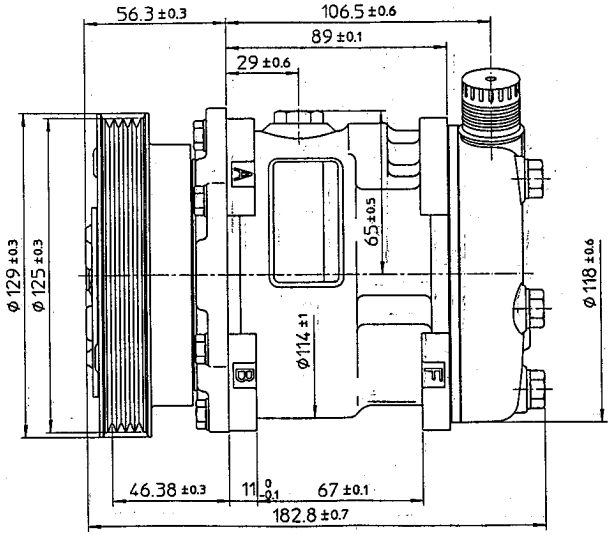


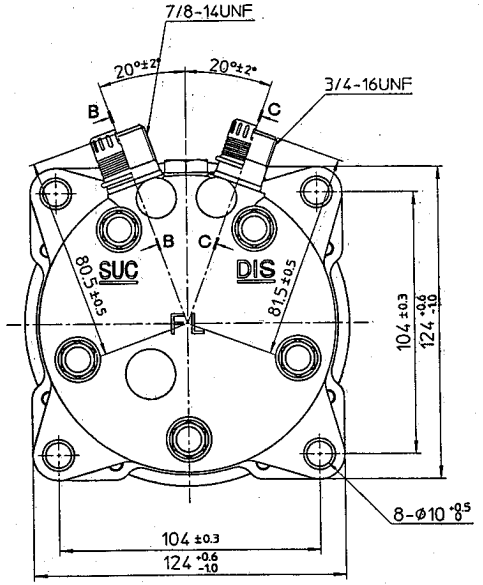


## COMPRESSOR SPECIFICATIONS

| | | |
|---|---|---|
| BORE | ø35 | mm ( 1.38 in.) |
| STROKE | 18.07 | mm ( 0.71 in.) |
| DISPLACEMENT PER REVOLUTION | 87 | cc/rev.( 5.3 cu.in./rev.) |
| NUMBER OF CYLINDERS | 5 | |
| MAXIMUM ALLOWABLE r.p.m. | 7500 | r.p.m. |
| MAXIMUM ALLOWABLE CONTINUOUS r.p.m. | 6500 | r.p.m. |
| REFRIGERANT | R-134a | |
| OIL : SP-20 OR EQUIV. | 100 | cc ( 3.4 fl.oz.) |
| WEIGHT | | kg ( lb) |

## CLUTCH SPECIFICATIONS

| | | |
|---|---|---|
| RATED VOLTAGE | DC 12 V | |
| BREAKAWAY TORQUE | 2.2 | kg-m ( 15.9 ft-lb) |
| MINIMUM ENGAGEMENT VOLTAGE | 7.5 | V MAX. |
| POWER CONSUMPTION | 48 | W ( AL ) |
| MAXIMUM ALLOWABLE r.p.m. | 7500 | r.p.m. |
| MAXIMUM ALLOWABLE CONTINUOUS r.p.m. | 6500 | r.p.m. |
| BELT TYPE | PV | TYPE |
| PULLEY DIAMETER | ø125 | mm ( 4.7 in.) |
| WEIGHT | | kg ( lb) |

| NO. | REVISION RECORD | BY | DATE |
|---|---|---|---|
| △ | | | |
| △ | | | |
| △ | | | |
| △ | | | |
| △ | | | |

| | | | |
|---|---|---|---|
| MATERIAL | PART NO. 5075 | NAME | COMPRESSOR |
| THIRD ANGLE PROJECTION | SCALE 1 : 1 | | |
| DESIGN BY M. Fuyu | DATE 21. AUG. 1995 | MODEL | SD5H09FL5075 |
| CHECKED BY M. Ida | DATE 22. AUG. 1995 | DRAWING NO. | 5075 – 6000 |
| APPROVED BY A. Tabe | DATE 22. AUG. 1995 | | |

SANDEN — SANDEN CORPORATION / SANDEN INTERNATIONAL CORPORATION