1. COMPRESSOR SPECIFICATIONS

NO.	ITEMS	SPECIFICATIONS / REMARKS
1	CYLINDER BORE	ø25.4 mm
2	STROKE	28.1 mm
3	NUMBER OF CYLINDERS	7
4	DISPLACEMENT PER REVOLUTION	99.8 cc/rev
5	MAXIMUM ALLOWABLE R.P.M.	9300 R.P.M.
6	MAXIMUM ALLOWABLE CONTINUOUS R.P.M.	8400 R.P.M.
7	LUBRICANT	90±15cc/ ND-OIL 8
8	WITHSTAND PRESSURE	LOW PRESSURE SIDE 2.5 MPa (25.5 kg/cm² G) / HIGH PRESSURE SIDE 5.3 MPa (54 kg/cm² G)
9	AIR RESISTANT TEST	LOW PRESSURE SIDE 1.67 MPa (17 kg/cm² G) / HIGH PRESSURE SIDE 3.53 MPa (36 kg/cm² G)
10	GAS LEAK RATE	MAXIMUM 14 g/yr / UNDER CONDITION R134a 0.98 MPa (10 kg/cm² G)
11	DIRECTION OF REVOLUTION	CLOCKWISE WHILE VIEWING CLUTCH FRONT
12	REFRIGERANT	HFC134a
13	VIBRATION DURABILITY	NO DAMAGE / TABLE -6
14	PERMISSIBLE MOUNTING ANGLE	BE FREE FROM DEFECT FOR 50° (BRKT 35° + ENG 15°)
15	WEIGHT	2.75 kg (WITHOUT OIL)
16	COMPRESSOR INTERNAL PRESSURE (NITROGEN)	49 kPa (0.5 kg/cm²G) MAX.

2. MAGNET CLUTCH SPECIFICATIONS

NO.	ITEMS		SPECIFICATIONS / REMARKS
1	TYPE		V-RIBBED BELT / 4PK MEET JASO E 109-84
2	BASIC ITEMS	RATED VOLTAGE	12 VDC
		POWER CONSUMPTION	43 W OR LESS
		STATIC FRICTIONAL TORQUE	INITIAL 23N·m (2.35 kg·m) min / FINAL 30N·m (3.06 kg·m) min / AFTER On-Off 100 CYC 12 VDC AT 20° C
		PULLEY DIAMETER	ø100 mm
3	PERFORMANCE	V-PULLEY RUN OUT	0.3 mm OR LESS
		WITHSTAND VOLTAGE	NO NOTICEABLE EFFECT / 500 VAC FOR 1 min
		INSULATION RESISTANCE	50 MΩ OR MORE / 500 VDC
		MINIMUM ENGAGEMENT VOLTAGE	7.5 VDC OR LESS / AT 20° C AIR GAP 0.35-0.65
		MINIMUM ACTUATING VOLTAGE	8 V OR LESS
		TEMPERATURE RISE OF COIL	90° C OR LESS / 12 VDC
		VIBRATION DURABILITY	NO DAMAGE / TABLE -6
		CORROSION DURABILITY	RED RUST SHALL BE LESS THAN 10% OF WHOLE SURFACE OF IRON EXCEPT SHAFT TOP AND FRICTION SURFACE / AFTER 96 Hr BY JIS Z-2371
		HEAT CYCLE DURABILITY	NO NOTICEABLE EFFECT / AFTER 10 CYCLES OF 120°C X 3 Hr → ROOM TEMP X 1 Hr → -30°C X 3 Hr → ROOM TEMP X 1 Hr/1 CYCLE
4	WEIGHT		1.62 kg
5	MAXIMUM ALLOWABLE R.P.M.		9300 R.P.M.
6	MAXIMUM ALLOWABLE CONTINUOUS R.P.M.		8400 R.P.M.

3. CONDITION OF DURABILITY TEST

AFTER DURABILITY TEST PERFORMANCE DEGRADATION: 10% MAX

	TEST ITEMS	COMPRESSOR R.P.M.	HIGH PRESSURE Pd MPa (kg/cm² G)	LOW PRESSURE Ps MPa (kg/cm² G)	ON-OFF TIME	TEST TIME Hr
1	LOW SPEED CONTINUANCE	700	2.45 (25.0)	0.29 (3.0)	10 min/1 min	500
2	HIGH SPEED ON-OFF	5000	1.25 (12.7)	0.07 (0.7)	10 sec/5 sec	500
3	HIGH SPEED CONTINUANCE	7000	1.04 (10.6)	0.03 (0.3)	CONTINUAL	100
4	SUPER SPEED CONTINUANCE	8400	1.04 (10.6)	0.03 (0.3)	CONTINUAL	10

4. PERFORMANCE

(Pd 1.47 MPa (15.0 kg/cm²G), Ps 0.2 MPa (2.0 kg/cm²G) SH=10 deg. SC=0 deg.)

Nc (RPM)	Q kw(Kcal/hr)	COP	L kw(ps)	ηV %	NOISE dB(A) at 90 cm
1000	1.97 (1690)	1.96	1.01 (1.37)	66.4	57
2000	3.81 (3280)	1.81	2.10 (2.86)	64.1	65
3000	5.14 (4420)	1.62	3.16 (4.30)	57.6	70

5. RELIEF VALVE SPECIFICATIONS

NO.	ITEMS	SPECIFICATIONS
1	REFRIGERANT	HFC134a
2	RELIEF BEGINING PRESSURE	3.43-4.14MPa (35.0-42.2 kg/cm² G)
3	RELIEF STOPPING PRESSURE	2.76MPa (28.1 kg/cm² G) OR MORE

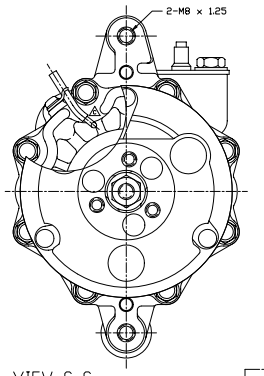

VIEW C-C

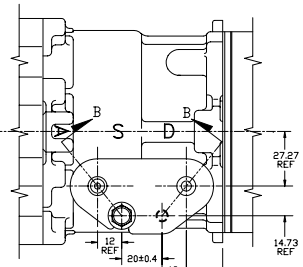

VIEW A-A

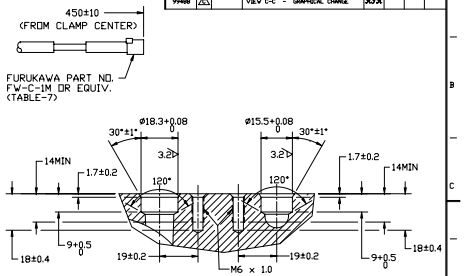

PARTIAL SECTION B-B

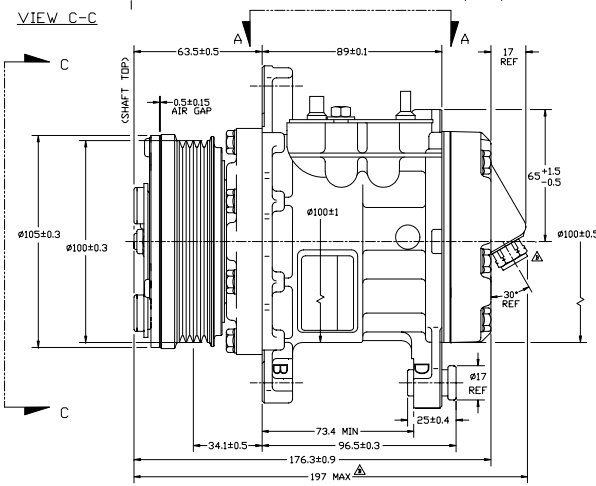

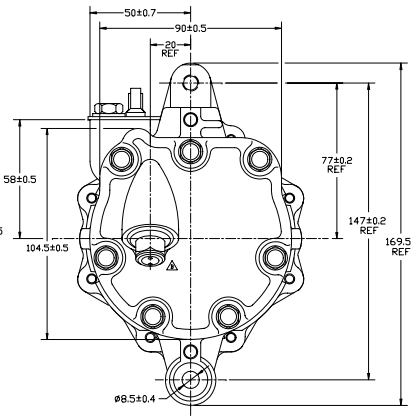

6. VIBRATION DURABILITY

VIBRATING DIRECTION	VERTICAL	HORIZONTAL (90° TO SHAFT AXIS)	HORIZONTAL (SHAFT AXIS)
VIBRATING ACCLERATION	294 m/s² (30G)	←	147 m/s² (15G)
FREQUENCY	50-250 Hz	←	←
SWEEP CYCLES	120s	←	←
VIBRATION CYCLES	10⁷	←	←

NOTE:

1. IMPROVED GEAR AND NSK's THRUST BEARING FOR NVH IS USED ON THIS COMPRESSOR.
2. SMC P/N 95200-50G01
   NIPPON DENSO P/N AA447100-4703
3. ADDED MoS_2 COATING ON CENTERING BALL.

7. CONNECTOR PART NO.

INSULATOR	TERMINAL	WIRE SEAL
FW-C-1M	FW-M-200	FW-W-201

8. VIBRATION CHECK OF GEARS AT SANDEN U.S. PRODUCTION LINE

VIBRATION LEVEL	LESS THAN 0.19G
CONDITIONS	400-600 Hz BAND PASS 1,500 rpm

PDCN	REV.	APPV DATE	REVISIONS	DWN	DSGN	CHK	APPV
	A		INITIAL RELEASE				
990807 99607	B	08/29/99	CHANGED TO MDHE PRV 4623-6470 197 MAX VAC 2014 MAX. UPDATED TITLE BLOCK.	JD	LR	SRR	SV
99488	C		VIEW C-C - GRAPHICAL CHANGE	RJR			

REV. LEVEL		
A	RELEASED FOR ENGG DEVELOPMENT	DSGN J.Kadowaki; DWN J.Kadowaki; CHK J.Ruelas; APPV. CRM; APPV. 7/9/98; DATE
A	RELEASED FOR DESIGN VALIDATION	DSGN J.Kadowaki; APPV. CRM; APPV. 7/9/98; DATE
A	RELEASED FOR PRODUCTION VALIDATION	DSGN J.Kadowaki; APPV. CRM; APPV. 7/9/98; DATE
A	RELEASED FOR PRODUCTION	DSGN J.Kadowaki; APPV. CRM; APPV. 7/9/98; DATE

SANDEN

SANDEN INTERNATIONAL (USA), INC.

DRAWN SCALE REF 1:1 PLOTTED SCALE REF 1:1 METRIC

This drawing and the information contained hereon are CONFIDENTIAL and PROPRIETARY to Sanden International (U.S.A.), Inc., are received in CONFIDENCE and shall not be used, copied, or disclosed to others without the written permission of Sanden International (U.S.A.), Inc.

INTERPRETATION OF THIS DRAWING PER ASME Y14.5M-1994

THIRD ANGLE PROJECTION

SIZE D

MATERIAL:

NAME: COMPRESSOR OUTLINE

DWG. NO. 4758-6000 REV C

DO NOT SCALE

CHGP 110A.3 DATE
Rev. Rules EFF'T'D

PDCN/BCN# 99488
PART# 4758-6000
PART DESC. COMPRESSOR OUTLINE
PDCN INITIATOR Laura McCuly
DEPT. Design Engineering (PPAP Issue)
PHASE
DATE: B

SIGNATURES:
GM
QA
MGR
CHK'D BY
WRITTEN BY Ruben Rodriguez

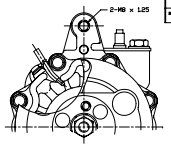

PDCN	REV.	APPV DATE	REVISIONS	DWN	DSGN	CHK	APPV
	A		INITIAL RELEASE				
990807 99607	B	08/29/99	CHANGED TO MDHE PRV 4623-6470 197 MAX VAC 2014 MAX. UPDATED TITLE BLOCK.	JD	LR	SRR	SV
99488	C		VIEW C-C - GRAPHICAL CHANGE	RJR			

TO:
DATE:
DATE: C

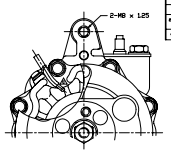

This document signifies that this PDCN has been completed. EFF'T'VITY DATE