PDCN	REV.	APPV DATE	REVISIONS	DWN	DSGN	CHK	APPV
			INITIAL RELEASE REFERENCE DRAWING 4816-6000 REV C.				

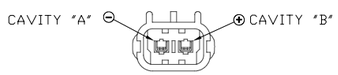

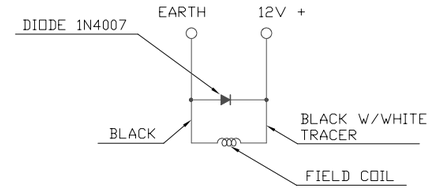

CIRCUIT DIAGRAM

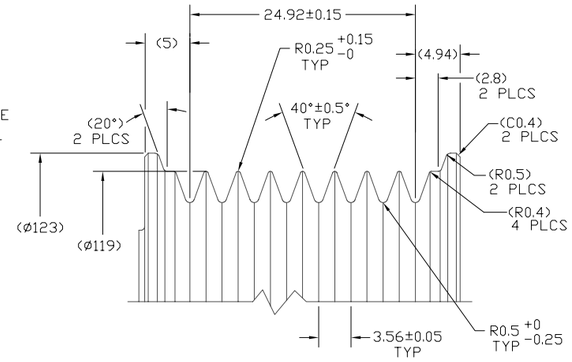

DETAIL C
SCALE: 3:1

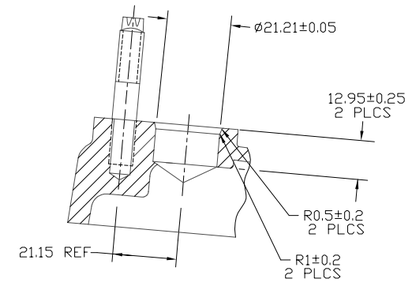

SECTION F-F
(SHIPPING PADS NOT SHOWN)

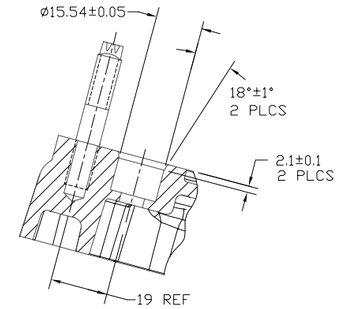

SECTION E-E
(SHIPPING PADS NOT SHOWN)

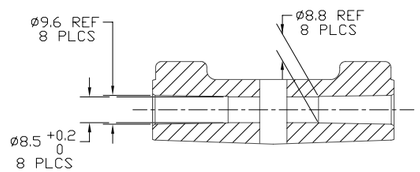

SECTION A-A

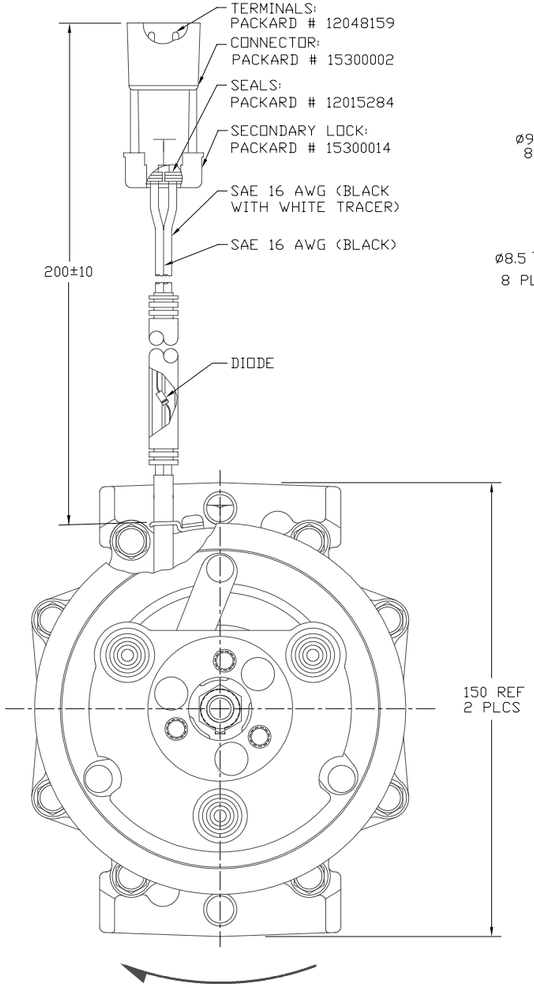

CLOCKWISE ROTATION

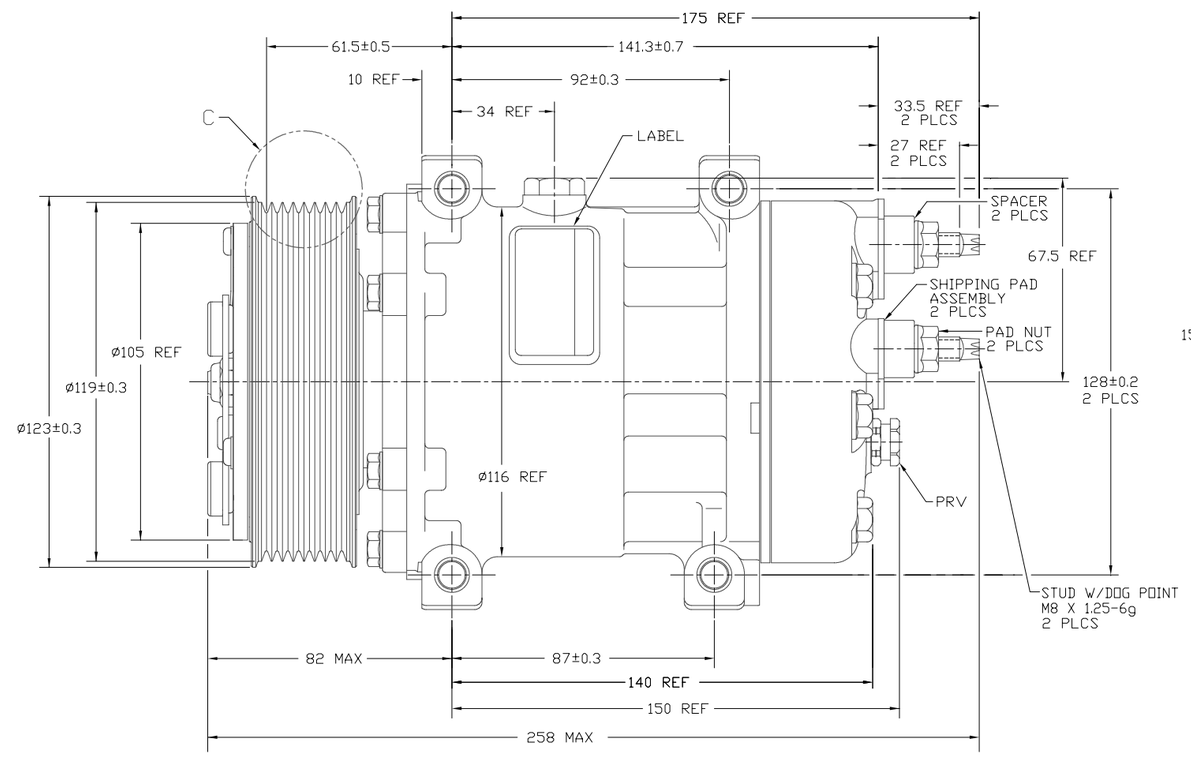

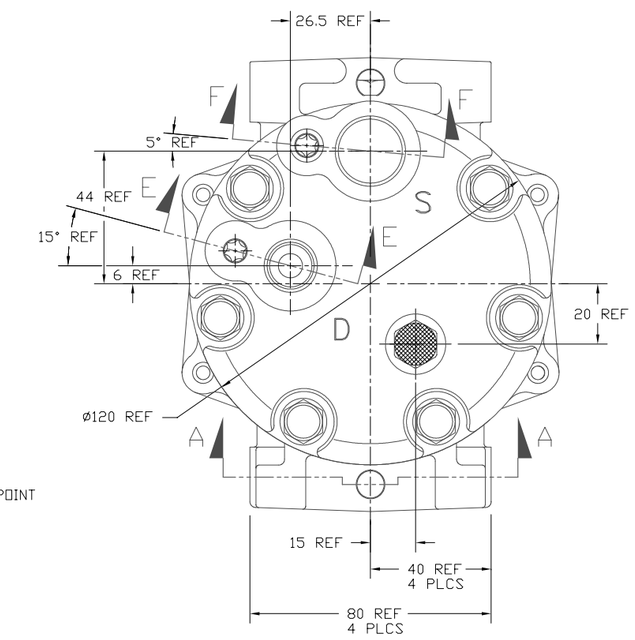

COMPRESSOR SPECIFICATIONS (REF)

DISPLACEMENT PER REVOLUTION	154.9 cc / rev. (9.5cu.in. / rev.)
MAXIMUM ALLOWABLE R.P.M.	8000 R.P.M.
MAXIMUM ALLOWABLE CONTINUOUS R.P.M.	6000 R.P.M.
REFRIGERANT	R134a
OIL (SP-15)	300 cc (10.1 fl.oz.)

CLUTCH SPECIFICATIONS (REF)

RATED VOLTAGE	DC 12V
BREAKAWAY TORQUE	3.5 kgf-m min. @ 12V
MINIMUM ENGAGEMENT VOLTAGE	7.5V @ AIR GAP 0.6mm
POWER CONSUMPTION	49 watts max.
BELT TYPE	PV8 TYPE
MAXIMUM ALLOWABLE BELT TENSION	120 kgf
PULLEY DIAMETER	ø119 mm (4.68 in.)
CLUTCH TYPE	HEAVY DUTY

REV. LEVEL	RELEASED FOR:
A	ENG'G DEVELOPMENT
	DSGN: Alferdo Armendariz
	DWN: J Sokolowski
	CHK: Dennis Lee 11/4/05
	APPV.: NB
	APPV. DATE: 12/6/05
REV. LEVEL	RELEASED FOR:
A	DESIGN VALIDATION
	DSGN: Alferdo Armendariz
	APPV.: NB
	APPV. DATE: 12/6/05
REV. LEVEL	RELEASED FOR:
A	PRODUCTION VAL'D.
	DSGN: Alferdo Armendariz
	APPV.: NB
	APPV. DATE: 12/6/05
REV. LEVEL	RELEASED FOR:
A	PRODUCTION
	DSGN: NB
	APPV.: NB
	APPV. DATE: 8/28/06

SANDEN
SANDEN INTERNATIONAL (U.S.A.), INC.

DRAWN SCALE REF 1:1 | PLOTTED SCALE REF 1:1 | METRIC

This drawing and the information contained hereon are CONFIDENTIAL and PROPRIETARY to Sanden International (U.S.A.), Inc., are received in CONFIDENCE and shall not be used, copied, or disclosed to others without the written permission of Sanden International (U.S.A.), Inc.

INTERPRETATION OF THIS DRAWING PER: ASME Y14.5M-1994 | SIZE: D

THIRD ANGLE PROJECTION | DO NOT SCALE

MATERIAL:

NAME: COMPRESSOR

DWG. NO.: 4544-6000 | REV: A