| PDCN | REV. | APPV DATE | REVISIONS | DWN | DSGN | CHK | APPV |
|---|---|---|---|---|---|---|---|
| | A | | INITIAL ISSUE REF PROJECT A05DV | | | | |




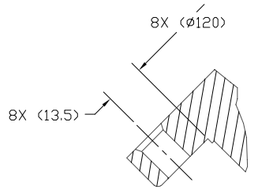


SECTION A-A

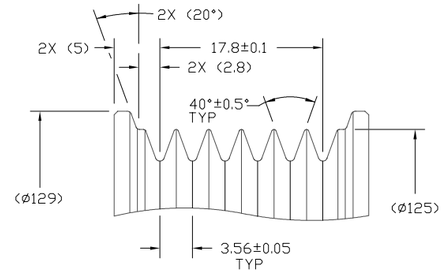


DETAIL B
SCALE 3:1

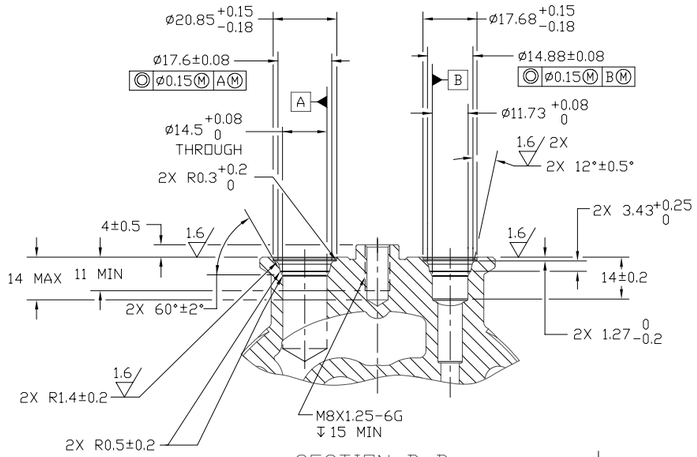


SECTION D-D
(BOLT AND SHIPPING PAD NOT SHOWN)

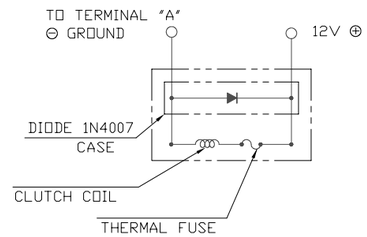


CIRCUIT DIAGRAM

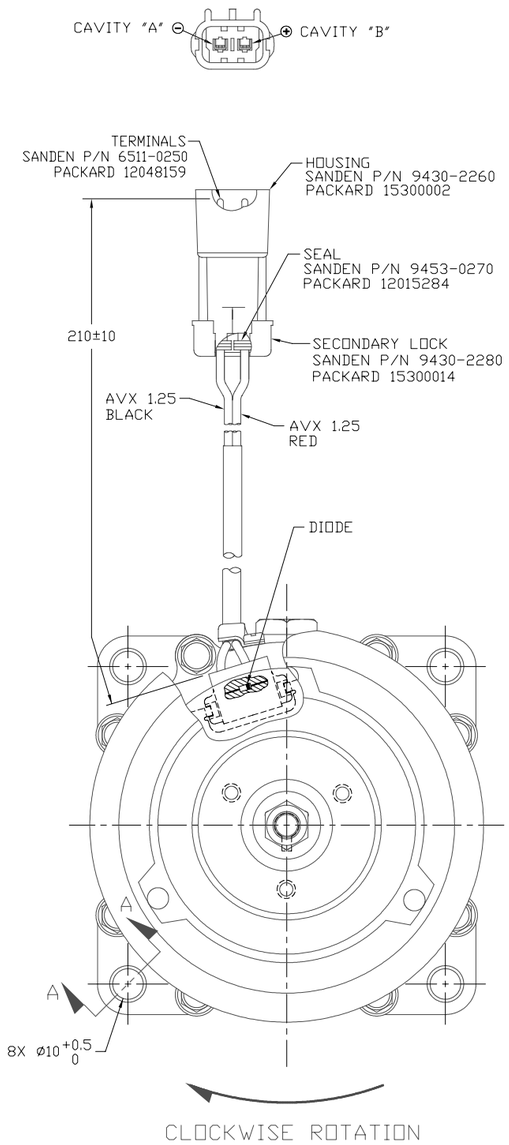


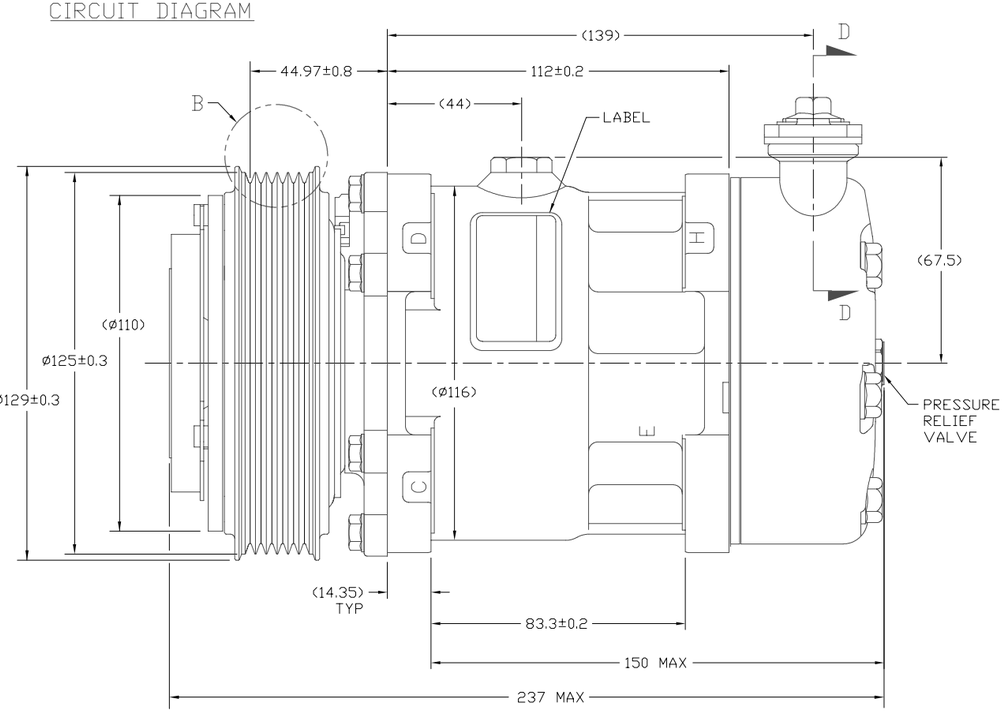


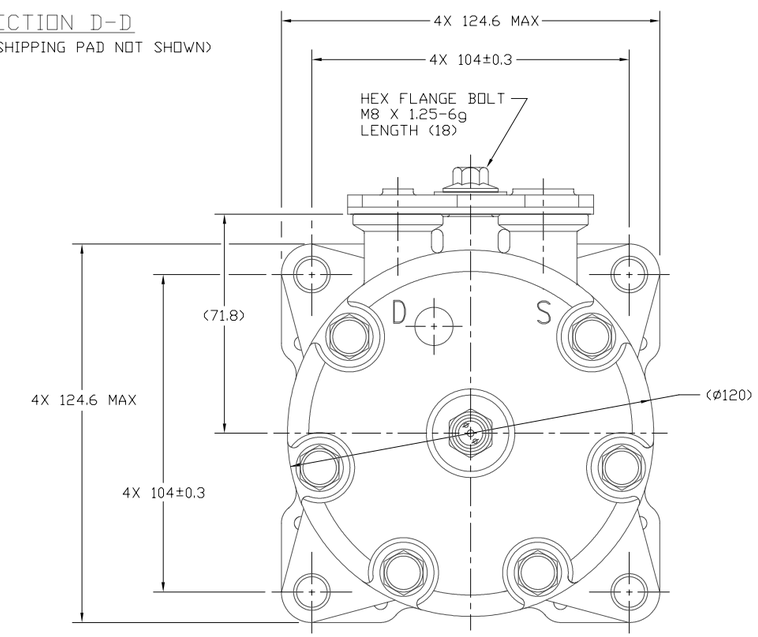


## COMPRESSOR SPECIFICATIONS (REF)

| | |
|---|---|
| DISPLACEMENT PER REVOLUTION | 154.9 cc / rev. ( 9.5cu.in. / rev. ) |
| MAXIMUM ALLOWABLE R.P.M. | 8000 R.P.M. |
| MAXIMUM ALLOWABLE CONTINUOUS R.P.M. | 6000 R.P.M. |
| REFRIGERANT | R134a |
| OIL ( SP-15 ) | 300 cc ( 10.1 fl.oz. ) |

## CLUTCH SPECIFICATIONS (REF)

| | |
|---|---|
| RATED VOLTAGE | DC 12V |
| BREAKAWAY TORQUE | 3.5 kgf-m min. @ 12V |
| MINIMUM ENGAGEMENT VOLTAGE | 7.5V @ AIR GAP 0.6mm |
| POWER CONSUMPTION | 49 watts max. |
| BELT TYPE | PV6 TYPE |
| MAXIMUM ALLOWABLE BELT TENSION | 120 kgf |
| PULLEY DIAMETER | Ø125 mm ( 4.92 in. ) |
| CLUTCH TYPE | HEAVY DUTY |

NOTE:
1. DIMENSIONS ARE TO VIRTUAL SHARP CORNERS UNLESS OTHERWISE SPECIFIED.
2. COMPRESSOR TO BE CHARGED WITH NITROGEN PRIOR TO SHIPPING WITHIN 0.2 TO 1.6 kg/cm².

DO NOT SCALE

| REV. LEVEL | RELEASED FOR: | |
|---|---|---|
| A | ENGG. DEVELOPMENT | |
| | DSGN | 24-Sept-06 A. Armendariz |
| | DWN | 02/05/06 R. Rodriguez |
| | CHK | 09/28/06 Dennis Lee |
| | APPV. | AA for NB |
| | APPV. DATE | 29-Sept-06 |
| A | DESIGN VALIDATION | |
| | DSGN | 24-Sept-06 A. Armendariz |
| | APPV. | AA for NB |
| | APPV. DATE | 29-Sept-06 |
| A | PRODUCTION 'VAL'D. | |
| | DSGN | 24-Sept-06 A. Armendariz |
| | APPV. | AA for NB |
| | APPV. DATE | 29-Sept-06 |
| | PRODUCTION | |
| | DSGN | |
| | APPV. | |
| | APPV. DATE | |

SANDEN
SANDEN INTERNATIONAL ( U.S.A. ), INC.

DRAWN SCALE REF 1:1 | PLOTTED SCALE REF 1:1 | METRIC

This drawing and the information contained hereon are CONFIDENTIAL and PROPRIETARY to Sanden International (U.S.A.), Inc., are received in CONFIDENCE and shall not be used, copied, or disclosed to others without the written permission of Sanden International (U.S.A.), Inc.

INTERPRETATION OF THIS DRAWING PER ASME Y14.5M-1994

THIRD ANGLE PROJECTION | SIZE D

MATERIAL:

NAME: COMPRESSOR

DWG. NO. 4408-6000 | REV A